[Downloaded from www.aece.ro on Thursday, March 28, 2024 at 21:24:39 (UTC) by 34.204.177.148. Redistribution subject to AECE license or copyright.]

Thermal Response Estimation in Substation Connectors Using Data-Driven Models

Francisco GIACOMETTO[1], Francesca CAPELLI[2], Luís ROMERAL[1], Jordi-Roger RIBA[2], Enric SALA[1]
[1]*Electronics Engineering Department, Universitat Politècnica de Catalunya, 08222, Terrassa, Spain*
[2]*Electrical Engineering Department, Universitat Politècnica de Catalunya, 08222, Terrassa, Spain*
francisco.giacometto@mcia.upc.edu

***Abstract*—Temperature rise simulations are one of the key steps in the design of high-voltage substation connectors. These simulations help minimizing the number of experimental tests, which are power consuming and expensive. The conventional approach to perform these simulations relies on finite element method (FEM). It is highly desirable to reduce the number of required FEM simulations since they are time-consuming. To this end, this paper presents a data-driven modeling approach to drastically shorten the required simulation time. The data-driven approach estimates the thermal response of substation connectors from the data provided by a reduced number of FEM simulations of different operating conditions, thus allowing extrapolating the thermal response to other operating conditions. In the study, a partitioning method is also applied to enhance the performance of the learning stage of a set of data-driven methods, which are then compared and evaluated in terms of simulation time and accuracy to select the optimal configuration of the data-driven model. Finally, the complete methodology is validated against simulation tests.**

***Index Terms*—computer simulation, connectors, finite element methods, predictive models, thermal analysis.**

I. Introduction

Temperature rise is one of the most important parameters during the design stage of substation connectors. It characterizes its thermal behavior which in turn greatly influences their expected lifetime and failure occurrence. Thermal stresses at which substation connectors and cables are subjected during real operating conditions greatly depends on weather conditions, the specific design, the amount of electrical current applied and the specific current cycling profile [1]. To ensure suitable thermal and electrical behavior, substation connectors must pass mandatory experimental tests in accordance with the ANSI/NEMA CC1-2009 standard [2] before their installation. This standard dictates that the temperature of the tested connector must not exceed the temperature of the conductors to which it is connected [3]. Since these tests are expensive and time-consuming, researchers are developing software tools to simulate accurately the thermal behavior of substation connectors [4-5]. Modelling software tools increase the competitiveness in the execution of technical applications [6], where it is necessary to have fast and accurate design tools to develop appropriate models of the designed components by taking the physics involved into account. These modelling methodologies must reach a compromise and equilibrium among simplicity, applicability and precision to reproduce the behavior of such industrial components [7]. It is a recognized fact that FEM is a flexible and useful numerical tool that allows analyzing non-linear multiphysics problems [8]. Nowadays, the high voltage components industry is using three-dimensional FEM (3D-FEM) simulations during the design and verification stages to accelerate the design process and reduce development costs while ensuring suitable component behavior [9-11]. In this study, FEM-based simulations allow assessing the feasibility of component thermal behavior during the product design phase, to ensure maximum component efficiency, reliability and quality. This is a complex multiphysics problem because of the strong interaction between the electromagnetic fields and the thermal behavior of substation connectors [4-5], which requires very high computational resources and is time demanding. Due to the wide range of possible operating and ambient conditions, to determine the temperature rise for all conditions, many similar simulations are required. However, this is a very time-consuming process due to the high computational cost involved with the 3D-FEM simulations. Therefore, there is an urgent need in reducing the time spent on the iterative set of simulations. Recently some authors have proposed some methodologies to reduce the computational burden in FEM simulations [12-13]. Other approaches simply implement parallel processing after the division of the task into threads [14-15]. To reduce the computational requirements and simulation time, this paper presents a data-driven computer-based systematic approach to optimally modelling temperature rise tests in substation connectors, which allows estimating the thermal response of substation connectors from the data provided by a small set of 3D-FEM simulations of different operating conditions. The data-driven approach allows extrapolating the thermal response to other operating conditions, thus being a useful tool for anticipating the test results faster than FEM-based methods do [16]. Data-driven prediction approaches can save computational time and resources while providing accuracy enough [17-18].

II. Applied Modeling Methodology

To test the suitability of the proposed methodology, a set of realistic data is required. For this purpose, the temperature rise curves of five parts (average temperatures of the bottom part of the body and the four keepers) of the analyzed substation connector obtained from 3D-FEM

This work was supported in part by the Generalitat de Catalunya (GRC MCIA, Grant nº SGR 2014-101) and MINECO (Spain) under the Project CICYT TRA2013-46757-R.

Digital Object Identifier 10.4316/AECE.2016.03004

1582-7445 © 2016 AECE

[Downloaded from www.aece.ro on Thursday, March 28, 2024 at 21:24:39 (UTC) by 34.204.177.148. Redistribution subject to AECE license or copyright.]

thermal simulations are the input data of the algorithms dealt with. The goal of the proposed method is to obtain from only three simulations performed at 50%, 100% and 200% of the rated current (986 A), the temperature profiles of the five parts of the connector at any test current. After training this algorithm with the data provided by the three FEM simulations, it should run in standalone mode, allowing to predict the temperature distribution in the connector in a fast manner. The thermal curves shown in Fig. 1, which were obtained from FEM simulations, serve for the interpolation of the intermediate thermal curves generated by different currents as well as training and test) data as detailed in the next paragraphs. From the simulation results shown in Fig. 1, it seems that the use of non-linear models based on artificial neural networks can be useful to deal with this problem, because of their ability to represent both linear and non-linear relationships and to learn these relationships directly from the data being modeled.

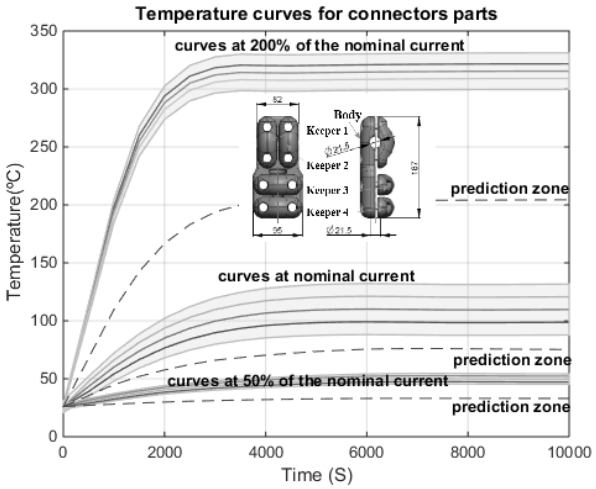

Figure 1. Temperature curves of the different parts of the substation connector (T-type S210ZTLS from SBI Connectors) under different operating conditions the catalogue.

Fig. 2 summarizes the multistep procedure proposed in this work, which is discussed below.

Step 0. Database generation. The database used to train the data-driven models is generated from the data of the 5 parts of the connector provided by the three FEM simulations, thus obtaining a total of 15 time-current curves.

Step 1. Partitioning methods. Partitioning methods are required to split the full database into train and test sets. By applying different partitioning methods, the statistical normality tests can measure the internal randomness of the learning algorithms used to train the data-driven models. The following partitioning methods have been implemented:

• Hold-Out Validation (HOV). It is used as the control partitioning method in order to verify the sensitivity of the model approach against initial random seed on the data order. Here, the database is split into train and test sets (66.7% and 33.3% of the data, respectively).

•Random Hold-Out Validation (RHOV). The train-test sets are split using a random time sequence and the database is divided into train and test sets (66.7%-33.3%).

•10-Fold Cross-Validation (10-FCV). The database is sequentially split into train and test sets, with 90% and 10% of data each, respectively.

•2-Fold Cross-Validation (2-FCV): in this case, the database is split into train and test sets, with the same number of data samples each.

In order to obtain a normality measure of each model, several repetitions are applied to each partitioning method. Each repetition implies the generation of one train-test set for each partitioning method and the evaluation of the 6 modeling algorithms for each train-test set.

To obtain a reliable statistical representation of the error distribution, the partitioning methods have been consecutively applied 50 times [19-20]. Whereas the 10-FCV method produces 10 different train-test sets, the 2-FCV only produces 2 train-test sets.

Step 2. Modeling. The data-driven models must learn the temperature dynamics from the information provided by the train-test sets produced by the partition methods. Each model adjusts the internal parameters using the train samples and verifies its accuracy in predicting the temperature of the test samples. In this paper different neural network models are analyzed, including non-linear autoregressive neural networks (NARNN), NARNN with exogenous inputs (NARXNN), layer recurrent neural networks (LRNN), feed-forward neural networks (FFNN), cascade feed-forward neural networks (CFNN) and adaptive neuro-fuzzy inference system (ANFIS). An exhaustive explanation of these algorithms is found in Section IV.

Step 3. Prediction. Once each model has been trained, its accuracy is measured by predicting the validation samples. The database to validate the data-driven models is generated from the data of the 5 parts of the connector provided by the three FEM simulations on the current prediction zone, thus obtaining a total of 15 current-time curves. The root mean square error (RMSE) and the mean absolute percentage error (MAPE) have been calculated for the six models trained at each repetition.

Step 4. Accuracy assessment. Next, after the 50 repetitions, the mean and standard deviation of the RMSE and MAPE for each model are calculated. Those statistics provide reliable information about the error variance and performance of the learning algorithm. From the information provided, it is possible to determine the suitability and the convergence strength of each modeling algorithm.

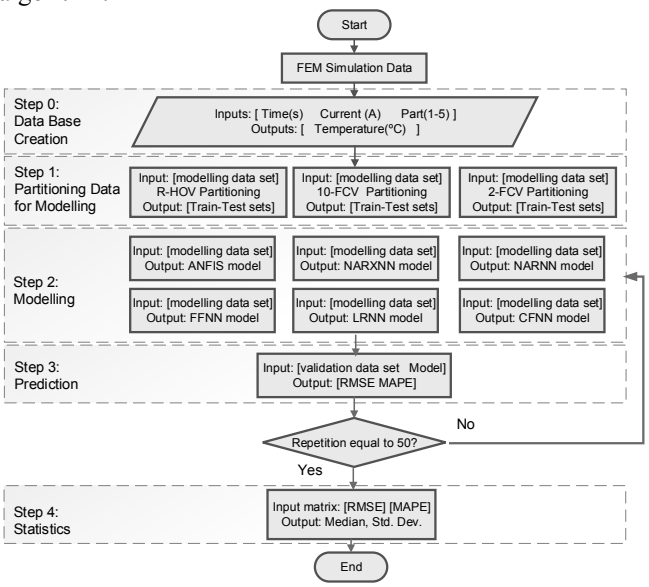

Figure 2. Flow chart of the current procedure implemented.

[Downloaded from www.aece.ro on Thursday, March 28, 2024 at 21:24:39 (UTC) by 34.204.177.148. Redistribution subject to AECE license or copyright.]

III. Modeling Algorithms

In order to model the thermal profile on the connectors, several data-driven models have been trained and their performance validated. The architecture of the analyzed modeling algorithms is summarized below.

Non-linear Autoregresive Neural Network (NARNN). It is a neural network that forecasts a time series based on the past values, thus generating an autoregressive model. This method has been considered because the thermal convection follows a trend based on his past values [21-22].

Fig 3. shows the structure of the NARNN model for a single output. A one-lagged sample version of the output as input has been applied.

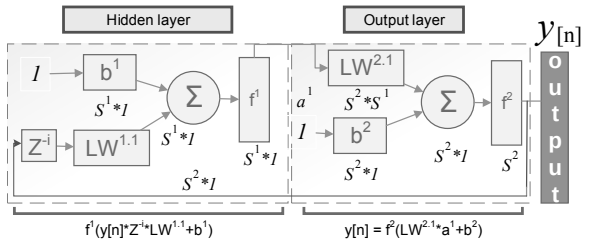

Figure 3. NARNN model structure.

The NARNN is modelled as,

$$y[n] = f(y[n-i_1], y[n-i_2],..., y[n-i_n]) \quad (1)$$

The output $y[n]$ is a function of past values of outputs, where $y[n-i_1]$, $y[n-i_2]$,…,$y[n-i_n]$ are the past output values of the i-th sample, $u_k[n-i_1]$, $u_k[n-i_2]$,…,$u_k[n-i_n]$ are the past input values of the i-th sample, f^1 and f^2 are the activation functions on the hidden and output layers, $IW^{q.k}$ is the input weight matrix order S^2*R_k, the superscript q denotes the layer number and k the number of vector inputs entering the weight. $LW^{q.l}$ indicates the layer weight matrix of order S^2*S^1, whereas b^2 and b^1 are the bias vectors of first and second layer respectively. R_k denotes input vector of R elements and Z^{-i} indicates the used number of lag samples.

Non-linear Autoregresive Neural Network with exogenous inputs (NARXNN). This is a neural network used to forecast time series based on the past values. It has exogenous inputs, that is, the model uses a feedback version of its forecast and also current and lagged values of current inputs. Fig. 4 shows the internal structure of the NARXNN model. A lag of one sample for the feedback output and no lag for the current input values [21-22] has been applied.

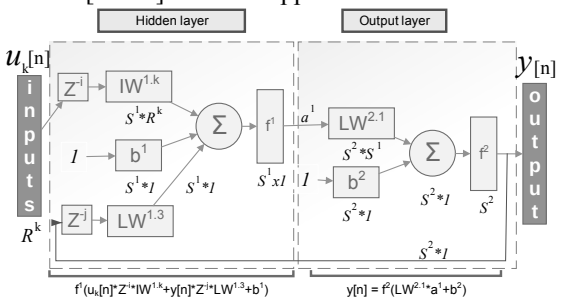

Figure 4. NARXNN model structure.

The NARXNN is modelled as,

$$y[n] = f(u_k[n-i_1], u_k[n-i_2],..., u_k[n-i_n], \\ y[n-i_1], y[n-i_2],..., y[n-i_n]) \quad (2)$$

$y[n]$ depending on the past inputs and outputs values.

Layer Recurrent Neural Network (LRNN). It uses the specified signals as inputs, but also integrates a lagged version of the hidden layer outputs. This creates a directed feedback lagged circle also called internal memory, thus exhibiting a dynamic temporal behavior [21-22]. Fig. 5 shows the internal structure of the LRNN model. A lag of one sample has been applied to the feedback of the hidden layer.

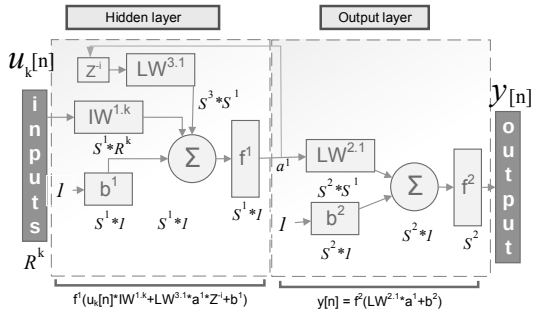

Figure 5. LRNN model structure.

The equation of the LRNN model is given as,

$$y[n] = f(u_k[n], a^1[n-i_1], a^1[n-i_2],..., a^1[n-i_n]) \quad (3)$$

The next value of the signal $y[n]$ is regressed to the input and the previous values of the intermediate layer outputs.

Feed Forward Neural Network (FFNN). It is a classical NN whose weights are adjusted through a back-propagation algorithm [23]. This type of network consists of multiple layers of computational units, usually interconnected in a feed-forward manner. By applying various techniques, the error is then feedback through the network. Using this information, the algorithm adjusts the weights of each connection in order to reduce the value of the error function by some small amount.

After repeating this process for a sufficiently large number of training cycles, the network will usually converge to some state in which the error is small. Fig. 6 shows the internal structure of a NN model.

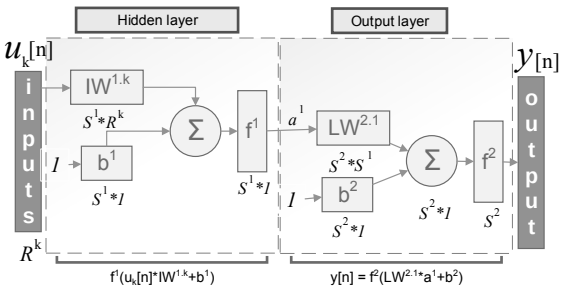

Figure 6. FFNN model structure.

The equation for the FFNN model is given as,

$$y[n] = f(u_k[n]) \quad (4)$$

The next value of the signal $y[n]$ is regressed to the input.

Cascade Feed Forward Neural Network (CFFNN). Fig. 7 shows the internal structure of a CFFNN with a unique hidden layer. As in the FFNN, the backpropagation algorithm adjusts the weights, but the architecture includes a connection from the inputs and every layer to following layers.

The equation for the CFFNN model is as,

$$y[n] = f(u_k[n], a^1[n]) \quad (5)$$

where the next value of the signal $y[n]$ is regressed to the input and the values of the intermediate layer outputs.

[Downloaded from www.aece.ro on Thursday, March 28, 2024 at 21:24:39 (UTC) by 34.204.177.148. Redistribution subject to AECE license or copyright.]

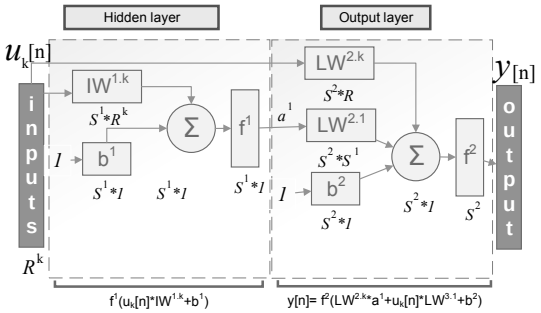

Figure 7. CFFNN model structure.

Adaptive neuro-fuzzy inference system (ANFIS). ANFIS is a universal approximation algorithm whose models are trained by means of a hybrid algorithm combining the back-propagation gradient descent and least-squares methods. ANFIS is based on the Takagi-Sugeno [24] fuzzy inference systems, and it was proposed in [25] to predict a chaotic dynamic series. Using training data, ANFIS creates an inference fuzzy system for which the input and output membership function (MF) parameters are adjusted. The first ones, called antecedent parameters, are trained using the backpropagation algorithm. The same algorithm can be used optionally to train the output MF's (consequent parameters). The least-squares method is applied to train the consequent parameters. These algorithms allow ANFIS to learn from the historical database.

A fuzzy first order model Takagi-Sugeno with a n-input and one-output system with *n*-MF's by every input has been applied, which is show in Fig. 8.

ANFIS is modeled as,

$$y[n] = f(u_k[n]) \tag{6}$$

where the next value of the signal $y[n]$ is regressed to the input and the values of the intermediate layer outputs.

The output $y[n]$ is a function of input values where, the superscript $i.k$ denoting the MF number and $\Psi_{i.k}$, are the MF's on the fuzzification layer with order S^i*R^k. It means that there exist i MF's for each input vector. π^i is the inference method used to combine the i-th MF's output values, w_i is a weight vector with order S^i*1, N^i is the normalization function used to normalize the weight vector, $\overline{w}_i$ is a normalized weight vector with order S^i*1, $P^{i.k}$ are the polynomials on the defuzzification layer with order S^i*S^k, the superscript $i.k$ denoting the polynomial number. It means that there exist i polynomials for each input vector.

Our ANFIS implementation counts with two MF per input, and his internal parameters have been trained used the hybrid method.

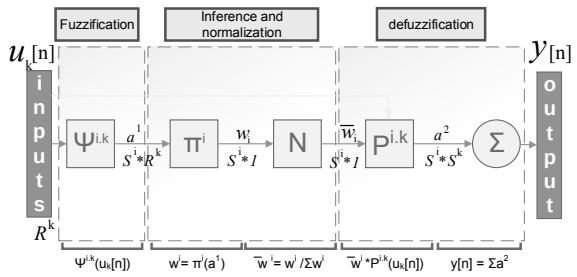

Figure 8. ANFIS model structure.

IV. Results

A database has been created starting from the thermal convection responses of the connector with different current levels. The modelling database and the validation database are composed of 3 thermal simulations providing a total 15 time-temperature curves, since each simulation consists of the temperature evolution of 5 parts of the connector using a sample time of 500 seconds and a total simulation time of 10000 seconds (steady-state solution). It is worth noting that each simulation is based on a specific electrical current passing through the connector. The five different thermal measurements of different connector parts correspond to the 4 keepers (#1 to #4) and the body (#5).

The number of neurons in the hidden layer for all models analyzed has been fixed by multiplying the number of inputs by two [26-28]. The number of hidden layers has been fixed to one, the activation function is a sigmoid and the selected learning algorithm is the back propagation. As a control method, a polynomial multiple regression has been included since by visual inspection it seems that the time-temperature curves shown in Fig. 1 can be described by this function type, which is modelled as,

$$y[n] = a_0 * [1 - a_1 e^{-a_2 * u_1[n]}] * u_2^{a_3}[n] + a_4 * u_3^{a_5}[n] \tag{7}$$

where a_k are the constants found by the least mean square algorithm and u_k are the inputs vectors shown in Fig. 2.

After 50 executions of the modelling algorithms over the validation dataset, the prediction errors have been obtained. The median (M) and standard deviation (D) of the results attained have been summarized in Tables I and II. Data-driven modeling algorithms are good enough when producing both low prediction error and standard deviation.

TABLE I. ACCURACY COMPARISON. MODELS BUILT OVER 10 DATASETS BY APPLYING HOV & RHOV PARTITION METHODS

Model		HOV		RHOV	
		RMSE	MAPE	RMSE	MAPE
NARNN	Median	22.65	49.92	30.75	133.82
	Std. Dev.	20.26	30.59	10.71	32.92
NARXNN	Median	123.92	502.29	75.89	319.44
	Std. Dev.	131.31	611.73	90.04	345.26
LRNN	Median	3.32	7.03	6.62	20.96
	Std. Dev.	1.28	3.31	1.45	4.75
FFNN	Median	25.63	87.00	23.82	81.24
	Std. Dev.	18.94	77.42	18.85	81.65
CFFNN	Median	19.20	68.34	19.88	69.21
	Std. Dev.	13.58	66.78	15.35	56.59
ANFIS	Median	5.24	20.41	5.01	19.13
	Std. Dev.	≈ 0	≈ 0	0.22	1.50
POLY	Median	9.18	38.24	8.83	39.69
	Std. Dev.	≈ 0	≈ 0	0.33	2.94

TABLE II. ACCURACY COMPARISON . MODELS BUILT OVER 10 DATASETS BY APPLYING 10FCV & 2FCV PARTITION METHODS

Model		10FCV		2FCV	
		RMSE	MAPE	RMSE	MAPE
NARNN	Median	18.56	44.22	24.68	49.16
	Std. Dev.	11.96	24.30	25.76	34.22
NARXNN	Median	295.02	1233.16	139.50	562.95
	Std. Dev.	462.73	2168.41	144.40	663.08
LRNN	Median	4.04	9.76	9.55	19.08
	Std. Dev.	1.73	4.41	3.99	9.88
FFNN	Median	29.75	106.56	23.15	76.44
	Std. Dev.	25.43	108.73	16.14	62.58
CFFNN	Median	21.03	74.37	21.18	62.98
	Std. Dev.	14.99	68.29	16.63	78.73
ANFIS	Median	5.19	20.02	7.21	31.42
	Std. Dev.	0.09	0.56	1.90	7.70
POLY	Median	8.59	41.22	8.78	39.46
	Std. Dev.	0.17	1.41	0.44	0.34

[Downloaded from www.aece.ro on Thursday, March 28, 2024 at 21:24:39 (UTC) by 34.204.177.148. Redistribution subject to AECE license or copyright.]

As observed in Tables I and II, ANFIS and LRNN are the most accurate techniques to model the analyzed data sets, except when dealing with 2FCV-type partitions. The ANFIS model is not as accurate as LRNN, but their RMSE and MAPE have a narrow standard deviation. As a consequence, the algorithm has a consistent convergence behavior when tuning the internal parameters, reaching similar values at each iteration. Among the analyzed methods, the NARX is the one providing poorest results, no matter which type of partition is applied.

V. Temperature Prediction Results

This section shows some predictions of the test set by means of different methods.

Fig. 9 shows the results with the LRNN on the connector body when applying the HOV partition technique. This modeling algorithm has been the one attaining most accurate results from all the tests and partitions evaluated.

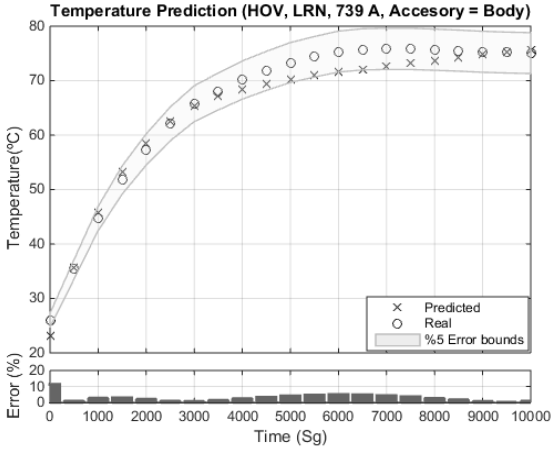

Figure 9. Results attained with the LRNN model over the test set using the HOV partition. Real and predicted temperature of the body connector when flowing an electric current of 739 A.

Fig. 10 shows the prediction of the polynomial model on connector body for a current of 1479 A. This data-driven modeling algorithm has achieved the lowest prediction error standard deviation. Its learning rule has a strong convergence because the error distribution is narrow.

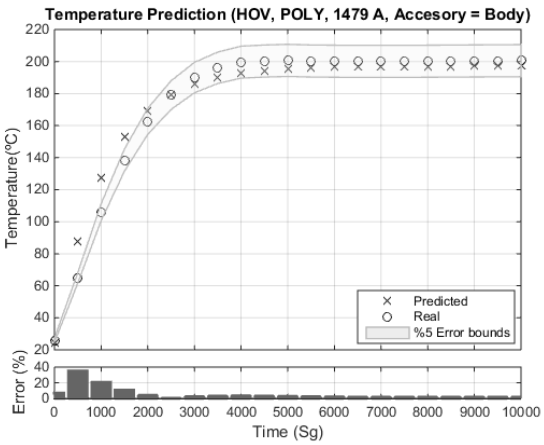

Figure 10. Results of polynomial model over the test set in HOV partition. Real and predicted temperature of the body connector when circulating a current of 1479 A.

Fig. 11 shows the prediction of the ANFIS model on the connector body when applying 986 A. This algorithm has achieved the second lowest prediction error standard deviation when applying the HOV partition technique.

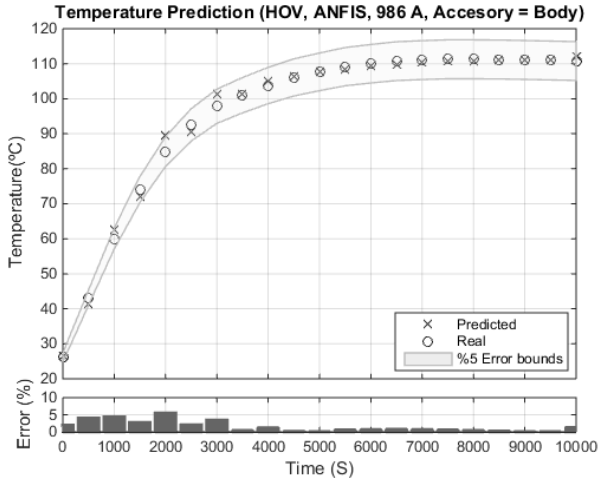

Figure 11. Results of ANFIS model over the test set in HOV partition: real and predicted temperature of the body connector when flowing an electric current of 986 A.

Fig. 12 shows the prediction of the CFFNN model on the connector body when applying 739 A. This data-driven modeling algorithm has achieved a partial reproduction of the temperature profile.

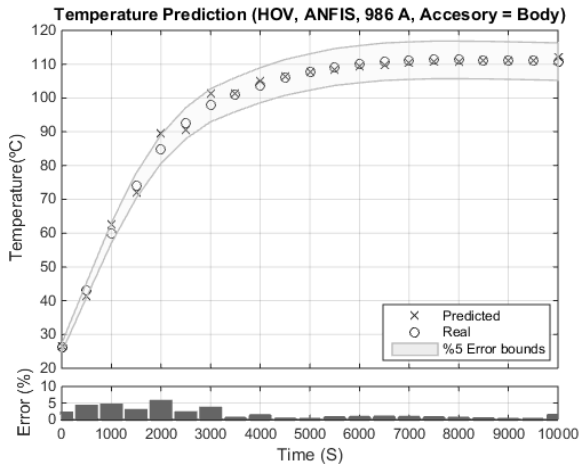

Figure 12. Results of CFFNN model over the test set in HOV partition. Real and predicted temperature of the body connector when circulating 739A.

VI. Computational Time Evaluation

The goal of the proposed data-driven modelling system is to reduce the simulation time when compared with FEM simulations. The time required for training the analyzed methods is compared and summarized in Table III. These results show a computational time great reduction for all data-driven modelling algorithms compared to FEM results. Simulations were carried out on a PC using an Intel core i7-2600 CPU, 3.4 GHz with 8 GB RAM.

Table III. Computational Time Comparison

Method	Computational time (minutes)		Times faster than FEM
	Mean	Std. Dev.	
FEM	45.00	1.26	15000
ANFIS	0.003	0.001	280
NARXNN	0.161	0.002	1364
NARNN	0.033	0.002	19
LRNN	2.372	0.374	266
CFNN	0.169	0.032	283
FFNN	0.159	0.003	45000
POLY	0.001	0.001	15000

[Downloaded from www.aece.ro on Thursday, March 28, 2024 at 21:24:39 (UTC) by 34.204.177.148. Redistribution subject to AECE license or copyright.]

VII. Conclusion

The conventional approach to perform thermal simulations in substation connectors and other types of electrical devices is based on finite element method (FEM) software. However, this approach is computationally expensive and very time-consuming, especially when a high number of simulations are required under different operating conditions. Therefore, it is highly desirable to reduce the number of required FEM simulations. This paper has studied the suitability of applying data-driven modeling techniques to drastically shorten the required simulation time from the data provided by a reduced number of FEM simulations comprising different operating conditions. This strategy has been proved suitable since it allows extrapolating accurately and in a faster manner the thermal response to intermediate operating conditions different from those analyzed by FEM simulations. The results were unequivocal, and the best methods to model the temperature rise on a substation connector where layer recurrent feed forward neural network and ANFIS. These models have strong learning rules that provide an enhanced convergence, this cause a high predictive accuracy and low error variance. Besides that, an outstanding reduction on the computational time execution has been achieved as result of the computational simplicity of these models in comparison to FEM modelling. Finally, the work shows the possibility of using data driven models to substitute FEM simulations for thermal analysis of electrical substation connectors and any object that express similar thermal behavior, without losing accuracy and saving computational time in a factor of hundreds.

References

[1] G. Mazzanti, "The Combination of Electro-thermal Stress, Load Cycling and Thermal Transients and its Effects on the Life of High Voltage ac Cables", IEEE Trans. Diel. Electr. Insul., vol. 16, pp. 1168-1179, 2009, doi: 10.1109/TDEI.2009.5211872

[2] National electrical Manufacturers Association, "ANSI/NEMA CC 1-2009 Electric Power Connection for Substations Standart", NEMA Communications Department, Arlington, Virginia, 2009

[3] J. J. A. Wang, E. Lara-Curzio, T. King, J. A. Graziano, and J. K. Chan, "The integrity of ACSR full tension splice connector at higher operation temperature", IEEE Trans. Power Deliv., vol. 23, pp. 1158-1165, 2008, doi: 10.1109/TPWRD.2008.917661

[4] J. Hernandez-Guiteras, J. R. Riba, and L. Romeral, "Redesign process of a 765 kVRMS AC substation connector by means of 3D-FEM simulations", Sim. Model. Pract. Theory, vol. 42, pp. 1-11, 2014, doi: 10.1016/j.simpat.2013.12.001

[5] F. Capelli, J. R. Riba, and D. Gonzalez, "Optimization of short-circuit tests based on finite element analysis", in IEEE International Conference on Industrial Technology (ICIT), pp. 1368-1374, 2015, doi: 10.1109/ICIT.2015.7125288

[6] S. Jia, J. F. Bard, R. Chacon, and J. Stuber, "Improving performance of dispatch rules for daily scheduling of assembly and test operations", Comput. Indust. Engineer., vol. 90, pp. 86-106, 2015, doi: 10.1016/j.cie.2015.08.016

[7] U. Roy, "An intelligent interface between symbolic and numeric analysis tools required for the development of an integrated CAD system", Comput. Indust. Engineer., vol. 30, pp. 13-26, 1996, doi: 10.1016/0360-8352(96)80914-4

[8] F. Tian and M. Voskuijl, "Automated generation of multiphysics simulation models to support multidisciplinary design optimization", Advan. Engineer. Informat., 2005, doi: 10.1016/j.aei.2015.07.004

[9] T. Altan and V. Vazquez, "Numerical Process Simulation for Tool and Process Design in Bulk Metal Forming", CIRP Annals – Manuf.. Technol., vol. 45, pp. 599-615, 1996, doi: 10.1016/S0007-8506(07)60514-9

[10] S. Cho, "A distributed time-driven simulation method for enabling real-time manufacturing shop floor control", Comput. Indust. Engineer., vol. 49, pp. 572-590, 2005, doi: 10.1016/j.cie.2005.08.003

[11] Y. Zhang, Z.-P. Fan, and Y. Liu, "A method based on stochastic dominance degrees for stochastic multiple criteria decision making", Comput. & Indust. Engineer., vol. 58, pp. 544-552, 2010, doi: 10.1016/j.cie.2009.12.001

[12] Z. Lou and H. M. Jin, "A novel dual-field time-domain finite-element domain-decomposition method for computational electromagnetics", IEEE Trans. Antennas Propagat., vol. 54, pp. 1850-1862, 2006, doi: 10.1109/Tap.2006.875922

[13] M. Nesme, F. Faure, and Y. Payan, "Hierarchical multi-resolution finite element model for soft body simulation", Biomedical Simulation, Proceedings, vol. 4072, pp. 40-47, 2006, doi: 10.1007/11790273_5

[14] U. K. Malte Neumann, S. R. Tiyyagura, W. A. Wall, and E. Ramm, "High Performance Computing on Vector Systems: Computational Efficiency of Parallel Unstructured Finite Element Simulations" , pp. 89-107, Springer-Verlag, 2006

[15] M. Behr and T. E. Tezduyar, "Finite-Element Solution Strategies for Large-Scale Flow Simulations", Comput. Meth. Appl. Mech. Engineer., vol. 112, pp. 3-24, Feb 1994, doi: 10.1016/0045-7825(94)90016-7

[16] C. Giannetti, R. S. Ransing, M. R. Ransing, D. C. Bould, D. T. Gethin, and J. Sienz, "A novel variable selection approach based on co-linearity index to discover optimal process settings by analysing mixed data", Comput. Indust. Engineer., vol. 72, pp. 217-229, 2014, doi: 10.1016/j.cie.2014.03.017

[17] S. Ferreiro, B. Sierra, I. Irigoien, and E. Gorritxategi, "Data mining for quality control: Burr detection in the drilling process", Computers & Industrial Engineering, vol. 60, pp. 801-810, May 2011, doi: 10.1016/j.cie.2011.01.018

[18] M. Luo, H.-C. Yan, B. Hu, J.-H. Zhou, and C. K. Pang, "A data-driven two-stage maintenance framework for degradation prediction in semiconductor manufacturing industries", Comput. Indust. Engineer., vol. 85, pp. 414-422, July 2015, doi: 10.1016/j.cie.2015.04.008

[19] B. Trawinski, M. Smetek, Z. Telec, and T. Lasota, "Nonparametric Statistical Analysis for Multiple Comparison of Machine Learning Regression Algorithms", Int. J. of Appl. Math. and Comp. Sci., vol. 22, pp. 867-881, 2012, doi: 10.2478/v10006-012-0064-z

[20] J. Luengo, S. Garcia, and F. Herrera, "A study on the use of statistical tests for experimentation with neural networks: Analysis of parametric test conditions and non-parametric tests", Exp. Syst. Appl., vol. 36, pp. 7798-7808, 2009, doi:10.1016/j.eswa.2008.11.041

[21] E. Levin, "A Recurrent Neural Network - Limitations and Training", Proceedings of the 22nd Conference on Information Sciences and Systems, vol. 1-2, pp. 296-301, 1988, doi: 10.1016/0893-6080(90)90054-O

[22] H. Cruse, "Neural Networks as Cybernetic Systems", pp. 89-99, Brains, Minds & Media, 2009.

[23] R. Rojas, "Neural networks: a systematic introduction", pp. 336-348, Springer-verlag, 1996.

[24] T. Takagi and M. Sugeno, "Fuzzy Identification of Systems and Its Applications to Modeling and Control", IEEE Trans. Sys. Man Cybern., vol. 15, pp. 116-132, 1985, doi: 10.1109/TSMC.1985.6313399

[25] J. S. R. Jang, "Anfis - Adaptive-Network-Based Fuzzy Inference System", IEEE Trans. Sys. Man Cybern., vol. 23, pp. 665-685, 1993, doi: 10.1109/21.256541

[26] F. Wong, "Time Series Forecasting Using Back-Propagation Neural Networks", Neurocomputing, Vol 2, no. 4, 1991, pp. 147-159, doi: 10.1016/0925-2312(91)90045-D

[27] R. L. MD Richard, "Neural network classifiers estimate Bayesian a posteriori probabilities", IEEE 4 (2) ASSP Magazine, pp. 4-22, 1987, doi: 10.1162/neco.1991.3.4.461

[28] F. Giacometto, E. Sala, K. Kampouropoulos and L. Romeral, "Short-term load forecasting using Cartesian Genetic Programming: An efficient evolutive strategy: Case: Australian electricity market", in IEEE Annual Conference on Industrial Electronics (IECON), pp. 005087-005094, 2015, doi: 10.1109/IECON.2015.7392898